常州飞奔进出口有限公司
CHANGZHOU FEIBEN IMP.AND EXP.CO.,LTD

MOWER MOTOR

S3001	Outline dimension	S3002	Outline dimension
	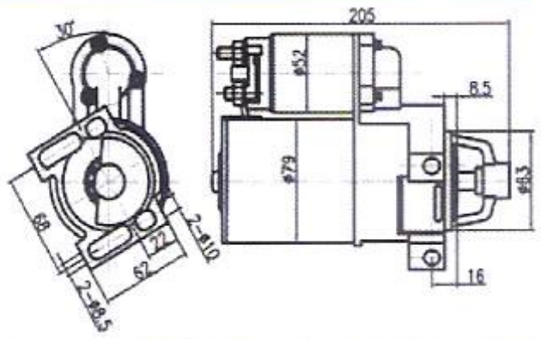		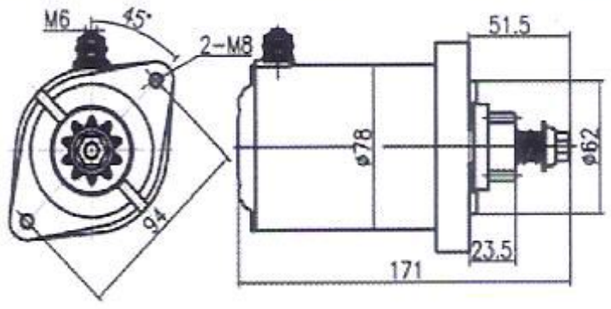
OEM NO: 25-098-08 6744		OEM NO: 21163-0727 SAB0176 5954	
	12V 0.9KW 10T CCW		12V 0.6KW 10T CCW

S3003	Outline dimension	S3004	Outline dimension
	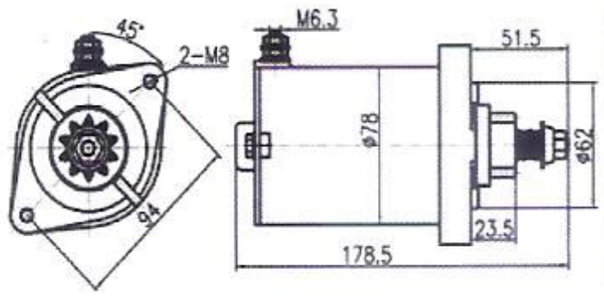		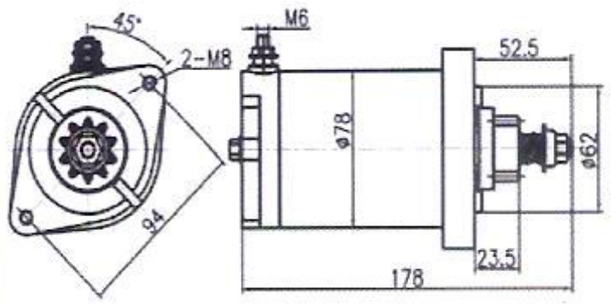
OEM NO: 21163-0711 SAB0172 5954N		OEM NO: 21163-7036 21163-0728 19277	
	12V 0.6KW 10T CCW		12V 0.6KW 10T CCW

S3005	Outline dimension	S3006	Outline dimension
	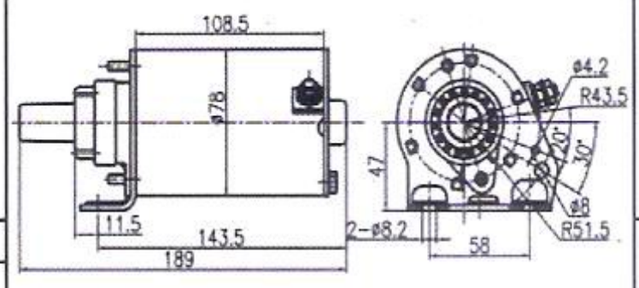		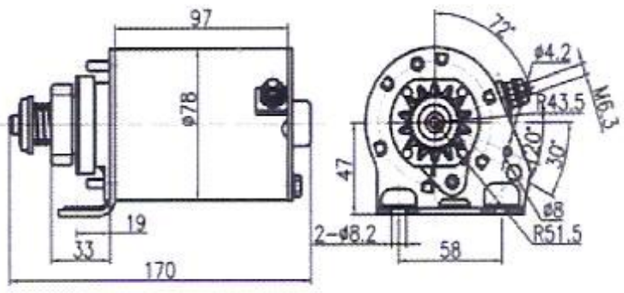
OEM NO: 693469 91-35-1028 5776		OEM NO: LG693551 593934 5777	
	12V 0.7KW 15T CCW		12V 0.6KW 14T CCW

S3007	Outline dimension	S3008	Outline dimension
	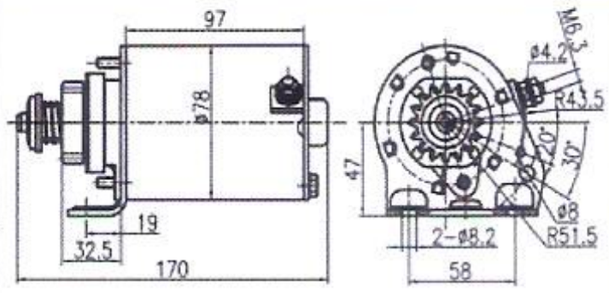		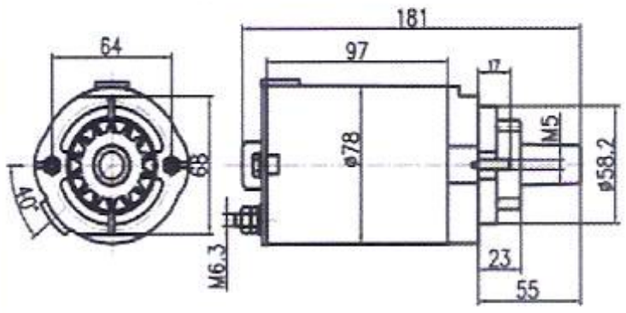
OEM NO: 693054 390838 5742		OEM NO: 2009801S S800 5796	
	12V 0.6KW 16T CCW		12V 0.6KW 14T CCW

S3009	Outline dimension	S3010	Outline dimension
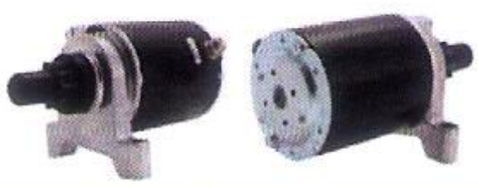	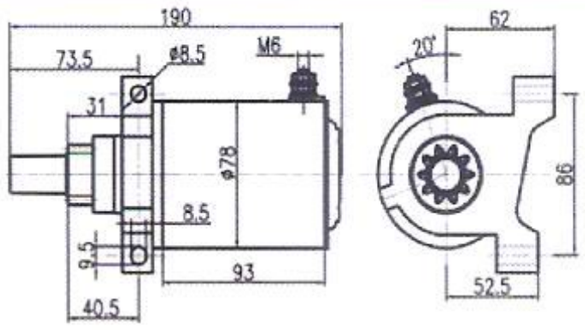		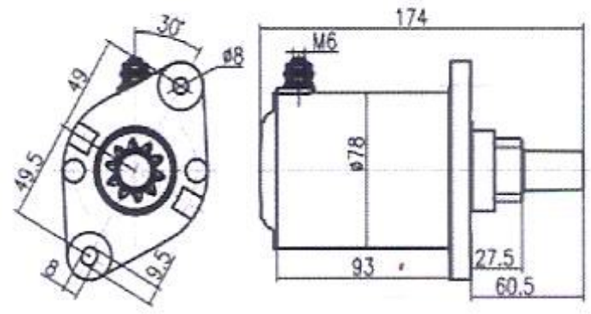
OEM NO: 410-22017 37425 5747		OEM NO: 410-22016 36264 5754	
	12V 0.6KW 10T CCW		12V 0.6KW 10T CCW

S3011	Outline dimension	S3012	Outline dimension
	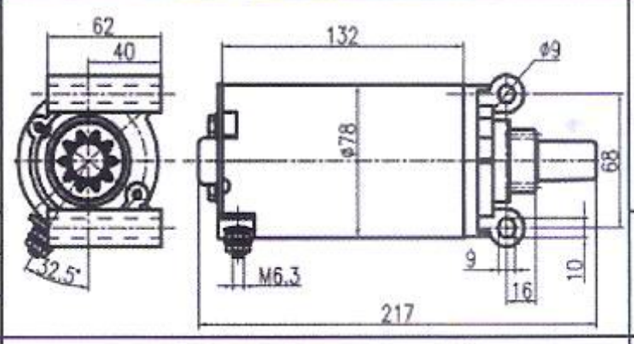		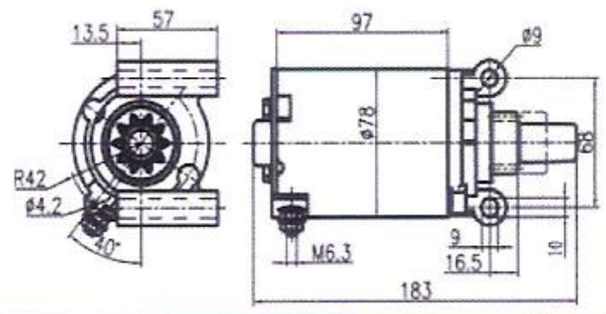
OEM NO: 32-098-04-S SAB0157 5801		OEM NO: 25-098-07-S AM130407 5802	
	12V 0.8KW 10T CCW		12V 0.6KW 10T CCW

S3013	Outline dimension	S3014	Outline dimension
	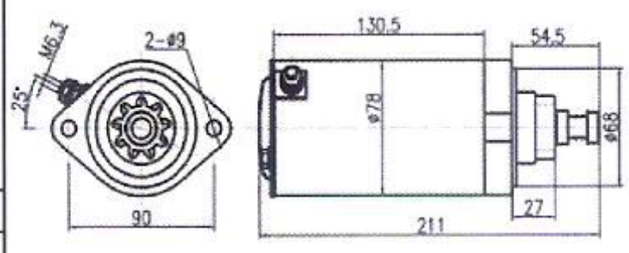		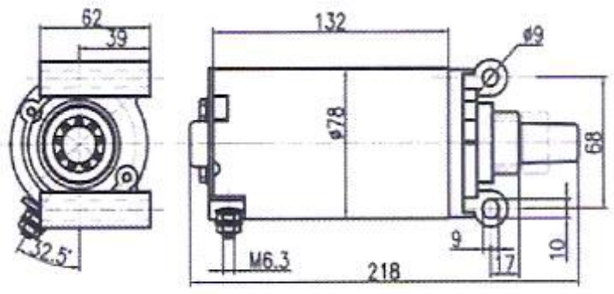
OEM NO: SAB0153 20692 5787		OEM NO: 32-098-08 34009	
	12V 0.8KW 9T CW		12V 0.8KW 9T CCW

TEL:86-519-85227216 13327889530
FAX:86-519-85227215 E-mail:jackshi@vip.sina.com

常州飞奔进出口有限公司
CHANGZHOU FEIBEN IMP.AND EXP.CO.,LTD

MOWER MOTOR

S3015	Outline dimension	S3016	Outline dimension
	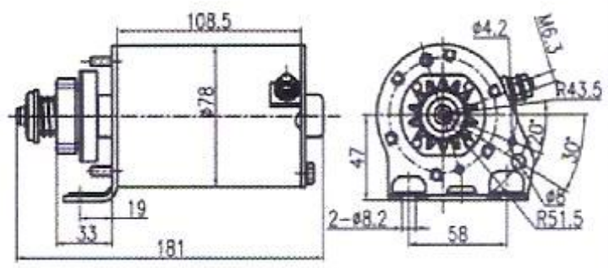		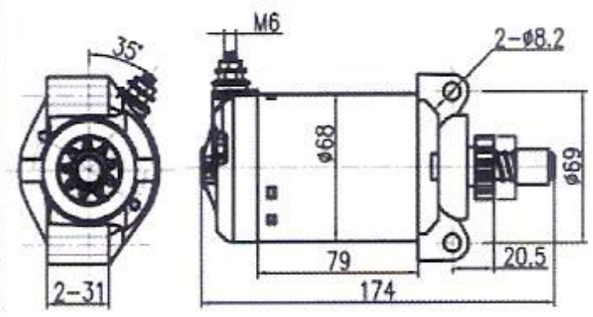
OEM NO: 693552 106-215 5932		OEM NO: 128000-2760 21163-2068 18403	
	12V 0.8KW 14T CCW		12V 0.6KW 9T CCW

S3017	Outline dimension	S3018	Outline dimension
	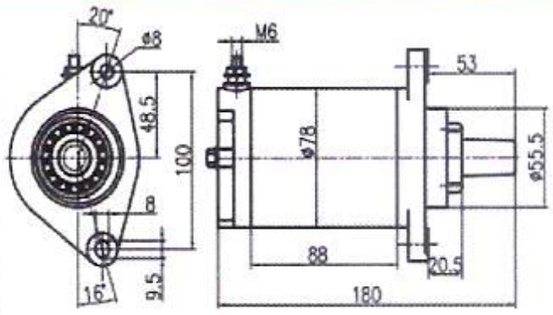	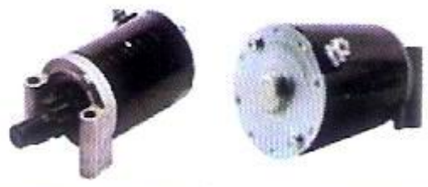	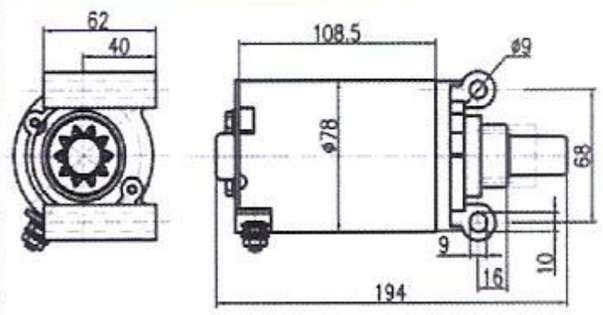
OEM NO: 715208 245432 5821		OEM NO: AM132818 106-526A 5775	
	12V 0.7KW 15T CCW		12V 0.8KW 10T CCW

S3019	Outline dimension	S3020	Outline dimension
	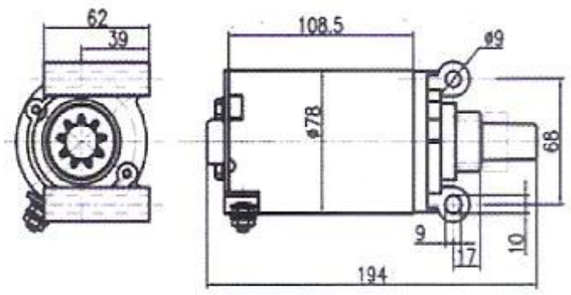		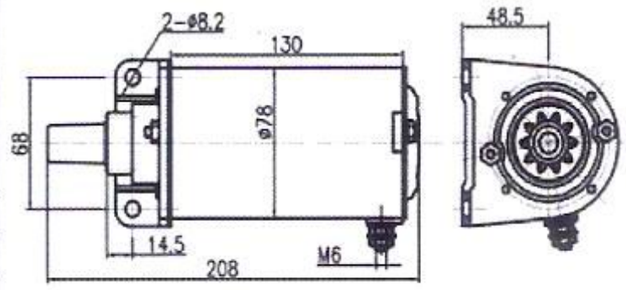
OEM NO: 32-098-08-S 34009S		OEM NO: AM133369 21163-7001 5951	
	12V 0.8KW 9T CCW		12V 0.8KW 10T CCW

S3021	Outline dimension	S3022	Outline dimension
	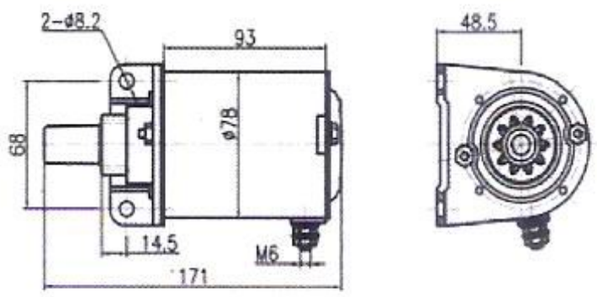		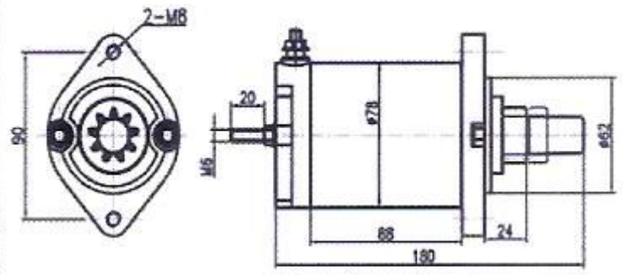
OEM NO: SAB0155 21163-7003 5952		OEM NO: SAB0105 410-21064 5768	
	12V 0.6KW 10T CCW		12V 0.6KW 9T CW

S3023	Outline dimension	S3024	Outline dimension
	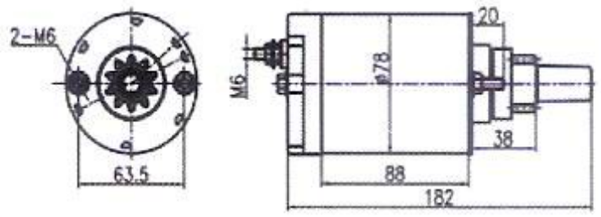		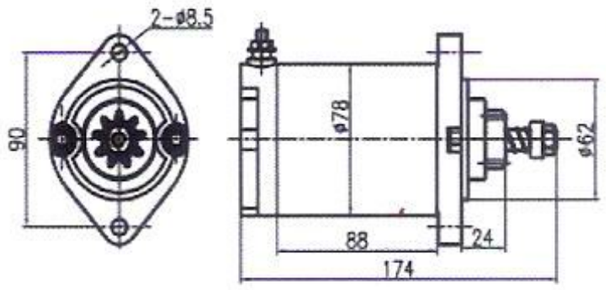
OEM NO: SAB0060 410-21097 5756		OEM NO: SM10771 410-21079 5923	
	12V 0.6KW 10T CCW		12V 0.6KW 9T CW

TEL:86-519-85227216 13327889530
FAX:86-519-85227215 E-mail:jackshi@vip.sina.com